Spring Clamps
Small, Large

Spring Side Clamps / Tip Attachments

■**Feature:** Spring force clamps workpiece with a constant force.

■Small

RoHS

Type	Main Body		Spring
	M Material	S Surface Treatment	M Material
SPCPS	1045 Carbon Steel	Electroless Nickel Plating	Spring Steel (ASTM A228)

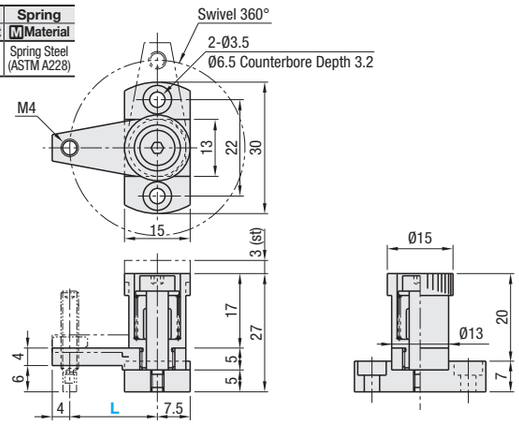

Part Number		Spring	Clamp Force (N)				Unit Price
			S (Light Load)		H (Heavy Load)		
Type	L		min.	max.	min.	max.	
SPCPS	20	S (Light Load) H (Heavy Load)	2.0	2.6	3.0	3.6	
	30						

■Large

RoHS

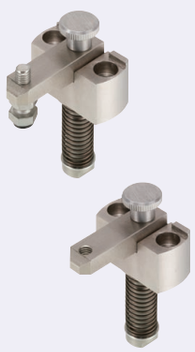

Type	Main Body		Spring
	M Material	S Surface Treatment	M Material
SPCPL	1045 Carbon Steel	Electroless Nickel Plating	Spring Steel (ASTM A228)

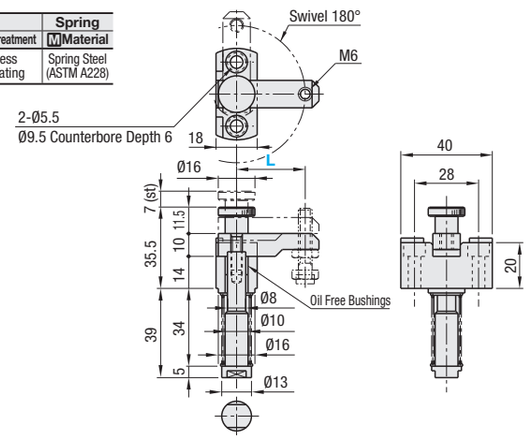

Part Number		Spring	Clamp Force (N)				Unit Price
			S (Light Load)		H (Heavy Load)		
Type	L		min.	max.	min.	max.	
SPCPL	30	S (Light Load) H (Heavy Load)	3.0	5.1	5.0	8.5	
	40						
	50						
	60						

Ordering Example

Part Number			Spring
Type	L		
SPCPS	20	-	S
SPCPL	50	-	H

Price Configure Online

Alterations

Part Number			Spring		(SB)
Type	L				
SPCPS	30	-	H	-	SB

Alteration	Code	Spec.	Price Adder
Tip Screw Included	SB	Tip Screw with a Urethane Bumper will be included. SPCPS...USS4-15 (☞P.1457) SPCPL...Stainless SteelT6-20 (☞P.1457)	

Days to Ship Configure Online

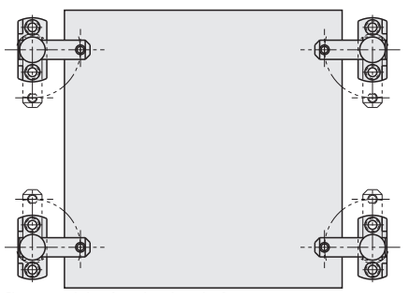

Clamps a workpiece from above by spring force.

■**Feature:** Newly added M4 size requires half the space compared to the conventional products.

■Spring Side Clamps

RoHS

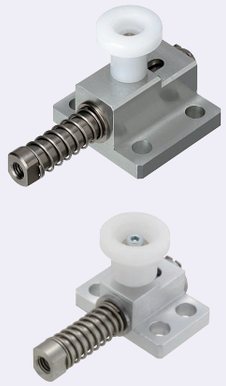

Type		Main Body		Pin		Spring	Knob
		M Material	S Surface Treatment	M Material	S Surface Treatment	M Material	M Material
Light Load	GPL	Aluminum Alloy	Clear Anodize	1045 Carbon Steel	Electroless Nickel Plating	304 Stainless Steel	Polyacetal
Heavy Load	GPH						
Extra Heavy Load	GPX						

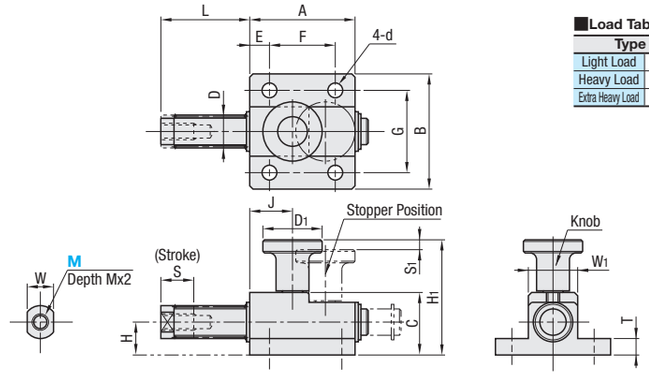

■**Load Table** Unit (N)

Type		min	max
Light Load	GPL	0.6	2.5
Heavy Load	GPH	0.9	3.8
Extra Heavy Load	GPX	1.4	5.9

kgf=Nx0.101972

In addition to the tip attachments shown below (GP and GPF), Urethane Pushers (USLH10 on P.2-1445, etc) and Stopper Pins (BSTEH8 on P.1455, etc) are also attachable to the tip of Spring Side Clamps.

Shift the knob to the stopper position (lower step) to prevent the pin from moving.

Part Number		S	Pin				Main Body								Knob					Unit Price
Type	M (Coarse)		D	L	W	H	A	B	C	T	G	E	F	d	S1	H1	J	D1	W1	
GPL GPH GPX	4	6	8	22	6	5	18	26	11.5	4	18	4	10	4.5	1.5	24.5	5.5	15	10	
	5	10	10	27	8	10	32	35	19	5	25	6	20	5.5	3	35	13	18	15	

■Tip Attachments

RoHS

V Shape

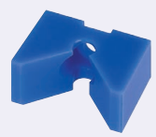

Flat Shape

GP (V Shape) **GPF** (Flat Shape)

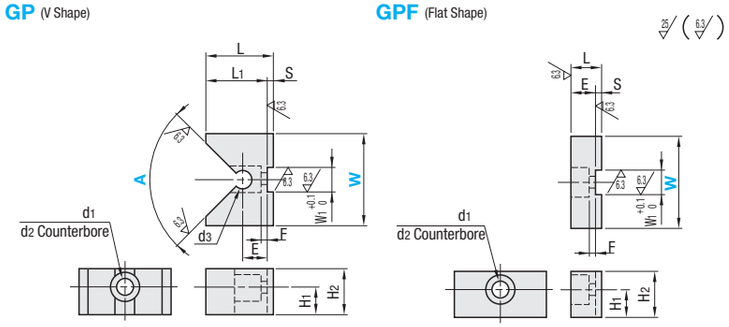

Applicable to M5 size Spring Side Clamp (GPL5, GPH5 and GPX5) only.

M Material: MC Nylon

■V Shape

Part Number	A°	W	d1	d2	L	L1	H1	H2	d3	E	F	S	W1	Unit Price
GP	90	20	5.5	9.5	18	16	9	15	6	8	2	2	8	
		30			22	20								
	120	20			15	13								
		30			18	16								

■Flat Shape

Part Number	W	d1	d2	L	H1	H2	E	F	S	W1	Unit Price
GPF	20	5.5	9.5	10	9	15	8	2	2	8	
	30										

Ordering Example

Part Number		A		W
GPH5 GP	-	90	-	30
GPF			-	20

Days to Ship Configure Online

Price Configure Online

Example

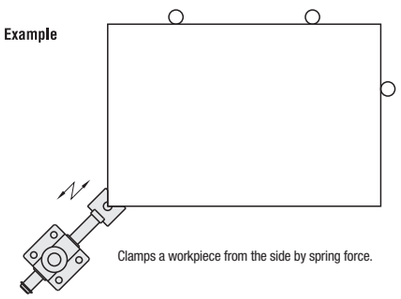

Clamps a workpiece from the side by spring force.